001
WILSON COMPOSITES
FRP CORNICE DETAIL

wilson COMPOSITES, LLC

WILSON COMPOSITES, LLC

880 SOUTH PLEASANTBURG DRIVE SUITE 2D,
GREENVILLE, SC 29607
WWW.FIBERTECH.NET

LEGEND / NOTES

No.	Description	Date
1	STANDARD FRP CORNICE DETAIL	12/11/2025

JOB No.

001
WILSON COMPOSITES
FRP CORNICE DETAIL

TITLE
COVER SHEET

SHEET No.	*REV*
01 A	1

11-12-2025 17:17:32

Copyright(c) WILSON COMPOSITES, LLC

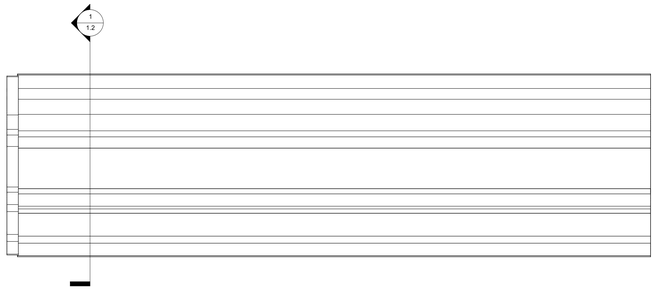

5 / 1.1 CORNICE BACK VIEW
SCALE : 1 1/2" = 1'-0"
ARCH REF:

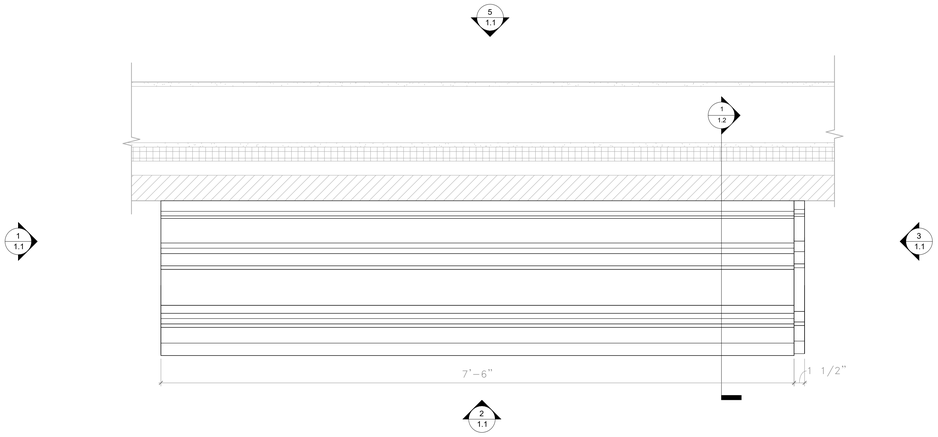

4 / 1.1 FLOOR PLAN
SCALE : 1 1/2" = 1'-0"
ARCH REF:

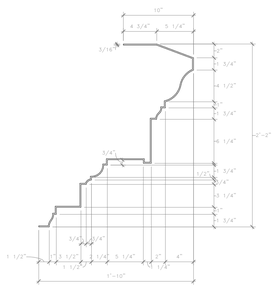

1 / 1.1 CORNICE LHS VIEW
SCALE : 1 1/2" = 1'-0"
ARCH REF:

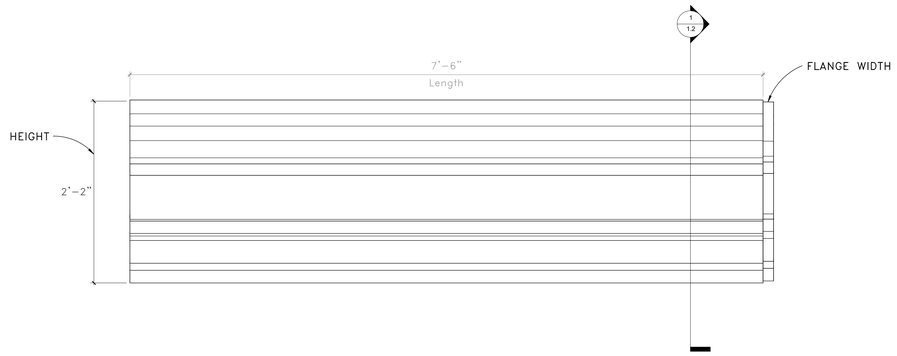

2 / 1.1 CORNICE FRONT VIEW
SCALE : 1 1/2" = 1'-0"
ARCH REF:

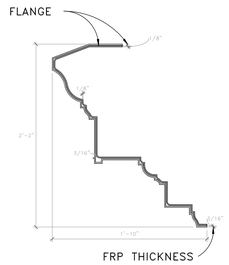

3 / 1.1 CORNICE RHS VIEW
SCALE : 1 1/2" = 1'-0"
ARCH REF:

wilson COMPOSITES, LLC

WILSON COMPOSITES, LLC

880 SOUTH PLEASANTBURG DRIVE SUITE 2D,
GREENVILLE, SC 29607
WWW.FIBERTECH.NET

LEGEND / NOTES

No.	Description	Date
1	STANDARD FRP CORNICE DETAIL	12/11/2025

JOB No.

001

WILSON COMPOSITES

FRP CORNICE DETAIL

TITLE

FRP Cornice

SHEET No.	*REV*
1.1	1

11-12-2025 17:17:32

Copyright(c) WILSON COMPOSITES, LLC

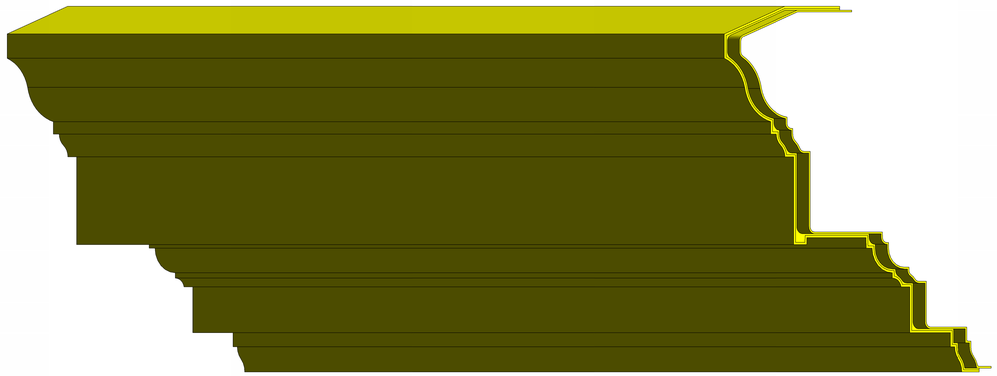

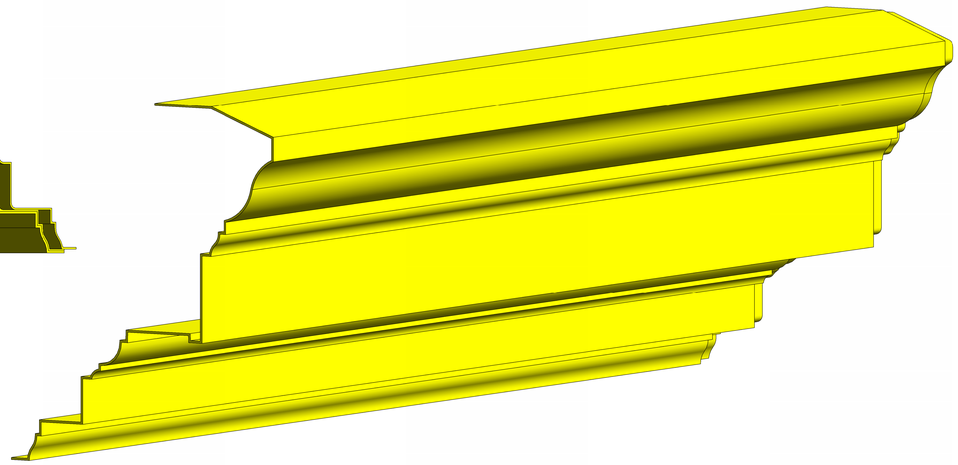

2 / 1.2 CORNICE 3D VIEW
SCALE :
ARCH REF:

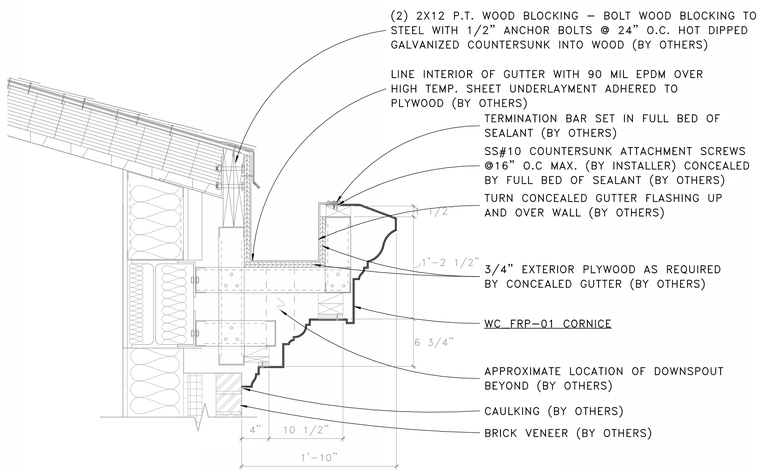

1 / 1.2 FRP CORNICE SECTION AND ATTACHMENT DETAIL
SCALE : 1 1/2" = 1'-0"
ARCH REF:

wilson COMPOSITES, LLC

WILSON COMPOSITES, LLC

880 SOUTH PLEASANTBURG DRIVE SUITE 2D,
GREENVILLE, SC 29607
WWW.FIBERTECH.NET

LEGEND / NOTES

No.	Description	Date
1	STANDARD FRP CORNICE DETAIL	12/11/2025

JOB No.

001

WILSON COMPOSITES
FRP CORNICE DETAIL

TITLE

CORNICE SECTION AND 3D VIEW

SHEET No. 1.2

REV 1

11-12-2025 17:17:34

Copyright(c) WILSON COMPOSITES, LLC